PRODUCED BY AN AUTODESK EDUCATIONAL PRODUCT

Mariana Fortes	20130147	Turma 1B	FA UTL
Sistemas de Representação Digital em Design			
VISTAS_DO_RELÓGIO	ESCALA:1:2		1
UNIDADE_DE_MEDIDA_MILIMETROS	vistas de acordo com o método americano		

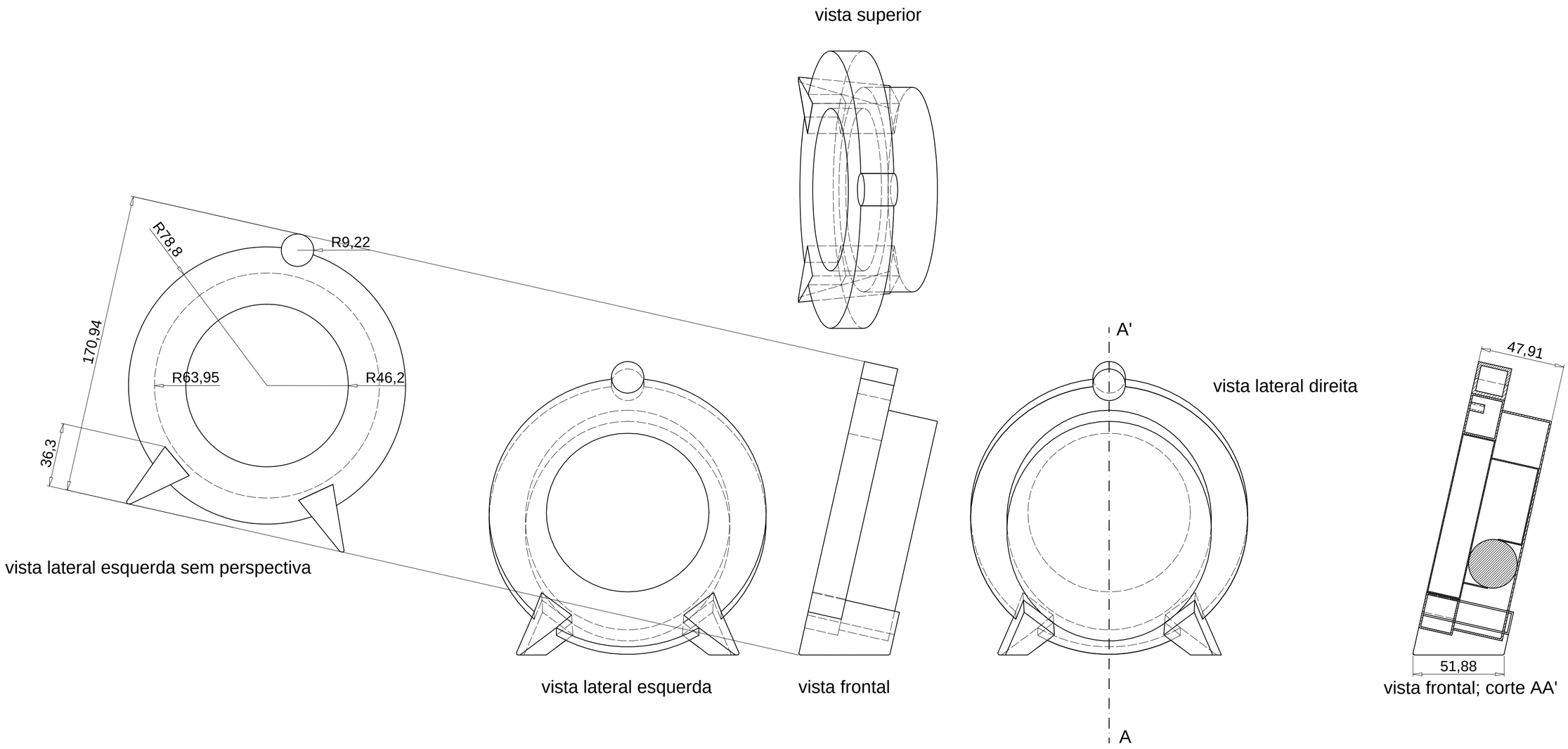

PRODUCED BY AN AUTODESK EDUCATIONAL PRODUCT
PRODUCED BY AN AUTODESK EDUCATIONAL PRODUCT
PRODUCED BY AN AUTODESK EDUCATIONAL PRODUCT